HAO SHOU 好手机电科技有限公司

HS-12130

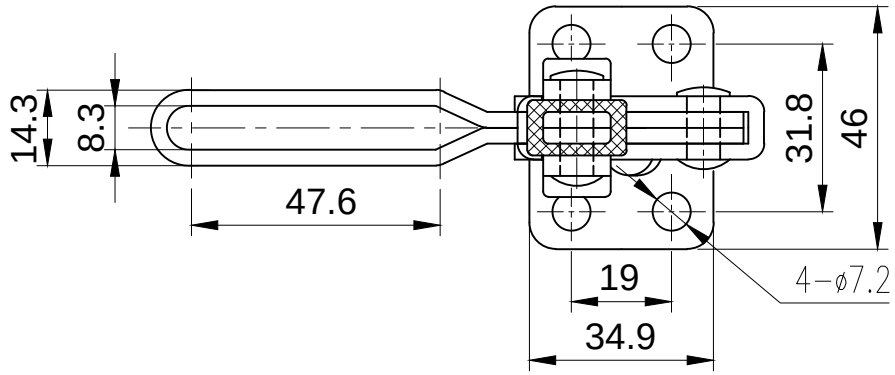

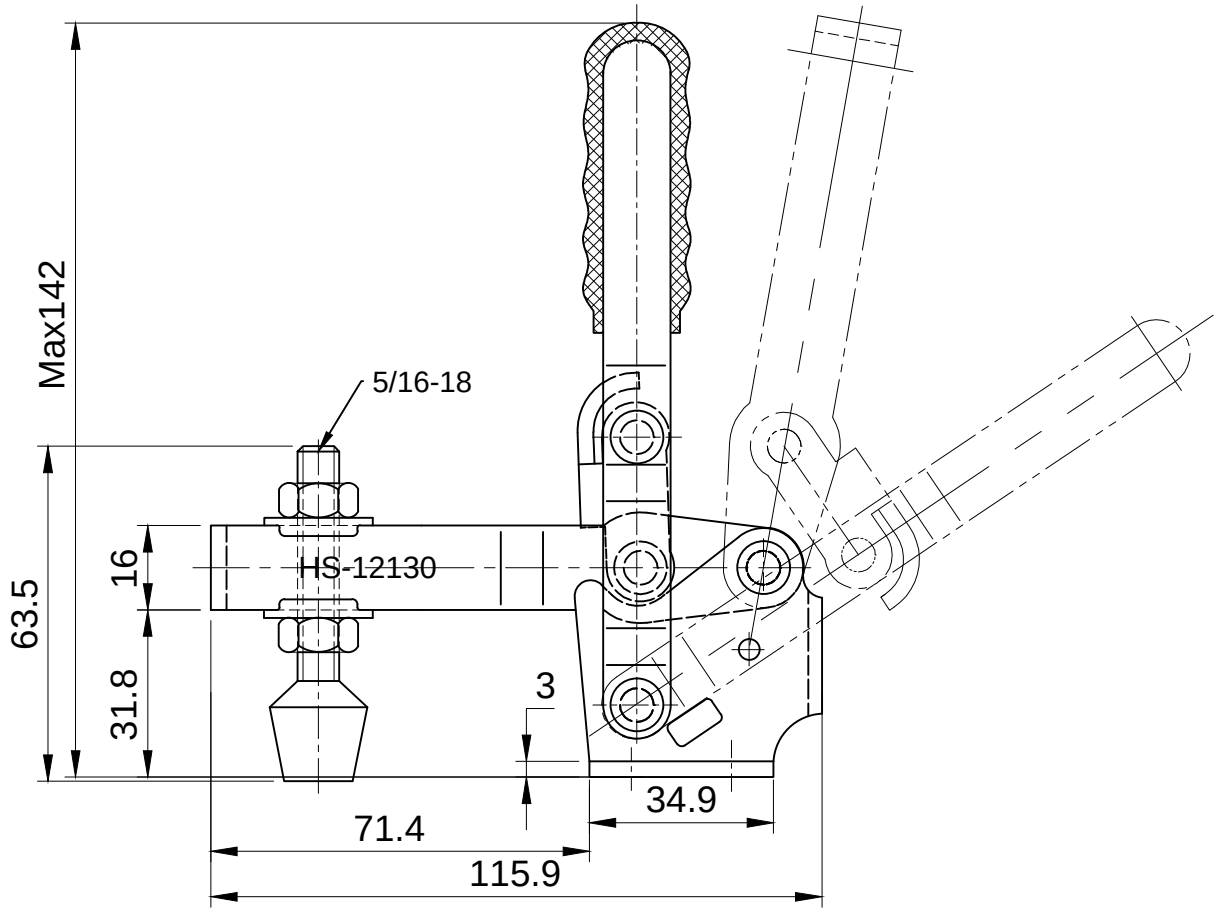

BAR OPENS:100°

HANDLE OPENS:60°

SPINDLE SUPPLIED:HS-FC-56212